OPERATIONAL CHARACTERISATION OF QUANTUM MEMORY EFFECTS VIA MULTI-TIME PROBING SCHEMES

PHILIP TARANTO
UNIVERSITY OF TOKYO, JAPAN

Int. J. Quantum Inf. **18**, 1941002 (2020)
ArXiv:1909.05245

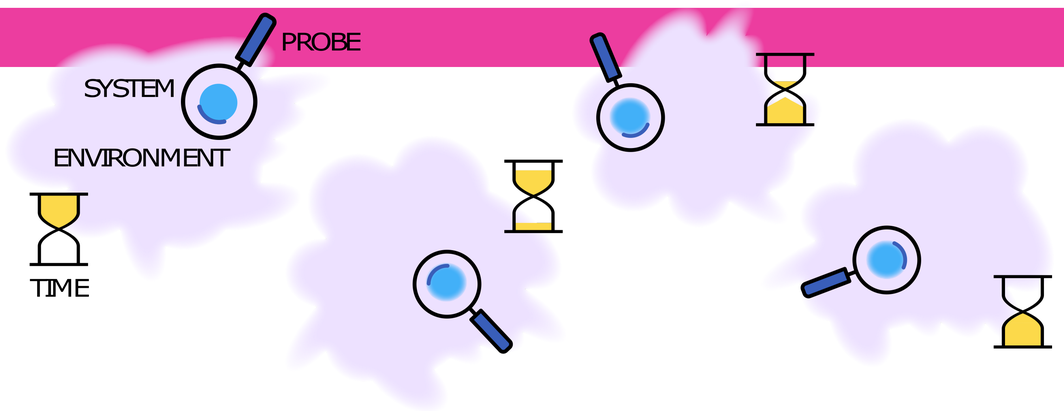

PROBLEMS TO OVERCOME

MEASUREMENTS ARE INVASIVE AND GENERALLY DISTURB THE SYSTEM STATE: MULTI-TIME **JOINT PROBABILITY DISTRIBUTION INSUFFICIENT** TO DESCRIBE A QUANTUM STOCHASTIC PROCESS. DESCRIPTION OF OPEN QUANTUM DYNAMICS IN THE PRESENCE OF INITIAL CORRELATIONS / MEMORY IN TERMS OF CHANNELS LEADS TO **BREAKDOWN OF LINEARITY, COMPLETE POSITIVITY (CP) OR CONSISTENCY.**

SO, WHAT EVEN IS A **QUANTUM STOCHASTIC PROCESS?**
HOW TO **CAPTURE MULTI-TIME MEMORY EFFECTS?**
CAN WE **ACCOUNT FOR FREEDOM OF INTERROGATION CHOICE?**
"DESCRIPTION OF PROCESSES WITH MEMORY (I.E. NON-MARKOVIAN PROCESSES) CANNOT BE A SIMPLE EXTENSION OF THOSE WITHOUT" [VAN KAMPEN].

OPERATIONAL DESCRIPTION FOR QUANTUM STOCHASTIC PROCESSES

CLEARLY DELINEATING THE **CONTROLLABLE INFLUENCE OF AN AGENT** FROM THAT OF **THE UNDERLYING PROCESS** LEADS TO AN **OPERATIONAL, UNAMBIGUOUS DESCRIPTION** OF A QUANTUM STOCHASTIC PROCESS.

PROCESS TENSOR IS A LINEAR MAP FROM OPERATIONS (CP MAPS) MAKING UP INSTRUMENTS (CPTP MAPS) TO PROBABILITIES VIA **TEMPORAL BORN RULE.**

CHOI-JAMIOŁKOWSKI ISOMORPHISM REPRESENTS THE PROCESS AS A **MANY-BODY QUANTUM STATE**, WITH **CAUSALITY** IMPOSING CERTAIN STRUCTURAL CONDITIONS.

CORRELATIONS IN CHOI STATE ENCODE **ALL MULTI-TIME MEMORY EFFECTS.**

Phys. Rev. A **97**, 012127 (2018)
F.A. Pollock, C. Rodríguez-Rosario, T. Frauenheim, M. Paternostro, K. Modi

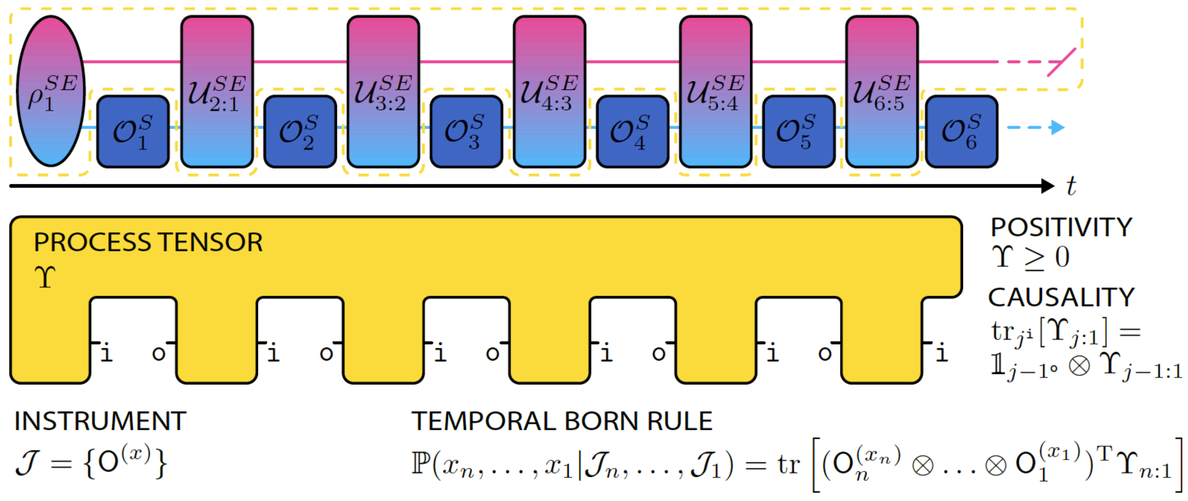

STRUCTURE

UNAMBIGUOUS CONDITION FOR MEMORYLESSNESS: PROCESS TENSOR IS A SEQUENCE OF INDEPENDENT CHANNELS BETWEEN INTERROGATION TIMES.

$$\Upsilon_{n:1}^{\mathrm{Markov}} = \rho_1 \otimes \Lambda_{2:1} \otimes \ldots \otimes \Lambda_{n:n-1}$$

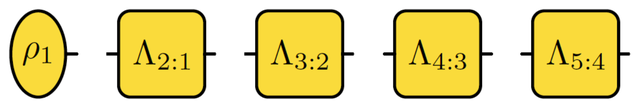

Phys. Rev. Lett. **120**, 040405 (2018)
F.A. Pollock, C. Rodríguez-Rosario, T. Frauenheim, M. Paternostro, K. Modi

THE RELATIONSHIP BETWEEN TWO-TIME **PROXIES FOR MEMORYLESSNESS / WITNESSES FOR MEMORY**, E.G. CP-DIVISIBILITY, IS CLARIFIED BY EXAMINING THE CORRELATION STRUCTURE OF THE PROCESS TENSOR.

Phys. Rev. Lett. **123**, 040401 (2019)
S. Milz, M.S. Kim, F.A. Pollock, K. Modi

ENDOWING MICROSCOPIC MODELS (E.G. COLLISION MODELS) WITH **PARTICULAR MEMORY STRUCTURES** LEADS TO DISTINCT MEMORY EFFECTS THAT REQUIRE DIFFERENT MEMORY ERASURE PROTOCOLS.

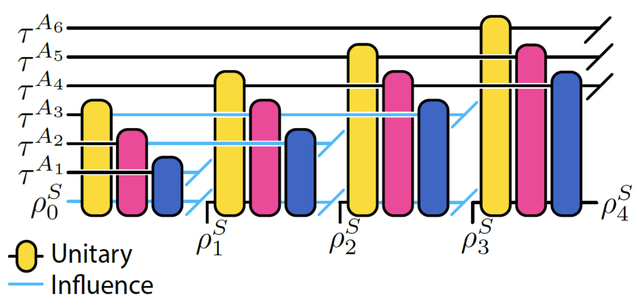

Phys. Rev. A **99**, 042108 (2019)
P. Taranto, S. Milz, F.A. Pollock, K. Modi

LENGTH

NO QUANTUM STOCHASTIC PROCESS WITH MEMORY CAN HAVE **FINITE MEMORY LENGTH** (I.E. FINITE MARKOV ORDER) WITH RESPECT TO **ALL INSTRUMENTS**; GENERIC PROCESSES HAVE INFINITE MEMORY LENGTH.

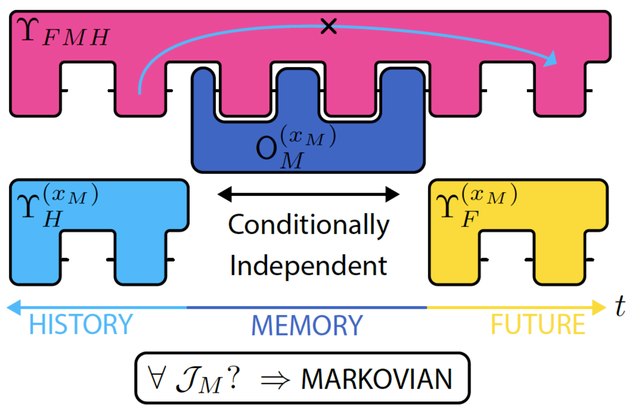

MEMORY LENGTH MUST THEREFORE BE CHARACTERISED IN AN **INSTRUMENT-SPECIFIC** MANNER: QUANTUM MARKOV ORDER. IF THE **FUTURE AND HISTORY** CAN BE RENDERED **CONDITIONALLY INDEPENDENT** FOR A CERTAIN INSTRUMENT SEQUENCE ON THE MEMORY, THEN THE PROCESS HAS **FINITE MEMORY LENGTH WITH RESPECT TO SAID INSTRUMENT.**

$$\Upsilon_{FH}^{(x_M)} = \mathrm{tr}_M\left[\mathsf{O}_M^{(x_M)} \Upsilon_{FMH}\right] = \Upsilon_F^{(x_M)} \otimes \Upsilon_H^{(x_M)}$$

FINITE QUANTUM MARKOV ORDER **DOES NOT IMPLY VANISHING CONDITIONAL MUTUAL INFORMATION** (CMI) OF PROCESS TENSOR.

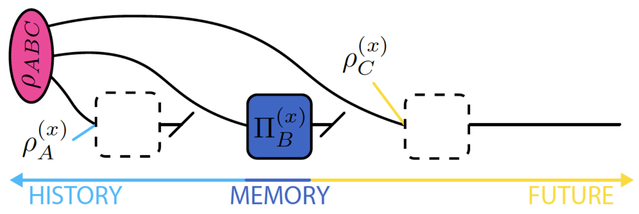

Phys. Rev. Lett **122**, 140401 (2019)
P. Taranto, F.A. Pollock, S. Milz, M. Tomamichel, K. Modi

STRENGTH

STRENGTH OF MEMORY CAN BE OPERATIONALLY QUANTIFIED BY **CORRELATIONS REMAINING** BETWEEN THE CONDITIONAL FUTURE AND HISTORY PROCESSES.

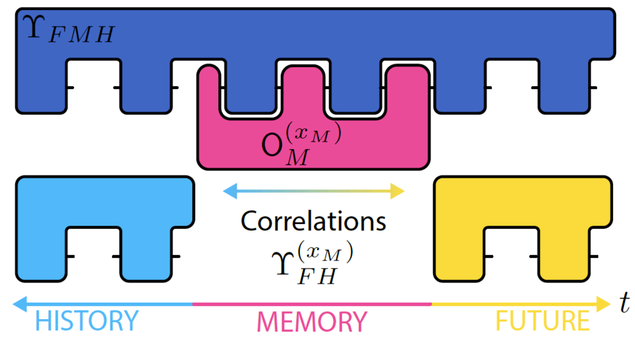

NON-MARKOVIAN QUANTUM PROCESS RECOVERABILITY: MEMORY STRENGTH BOUNDS THE **MULTI-TIME PREDICTION ACCURACY** THAT ARISES BY NEGLECTING THE HISTORY. FURTHERMORE, WE DEMONSTRATE HOW TO **CONSTRUCT THE OPTIMAL RECOVERY PROCESS** FOR ANY INSTRUMENT.

Memory strength — Operational temporal CMI — Average MI of conditional processes

$$\Theta(\mathcal{J}_M) := I(F:H|\mathcal{J}_M) = \sum_{x_M} I(F:H)_{\Upsilon_{FH}^{(x_M)}}$$

$$|\langle C\rangle_{\Upsilon_{FMH}} - \langle C\rangle_{\Lambda_{FMH}^{\mathcal{J}_M}}| \leq |C|\sqrt{2D_{FH}\Theta(\mathcal{J}_M)}$$

Actual expectation value of multi-time observable
Simulated expectation value of multi-time observable

GENERALISES PREVIOUS NOTIONS OF MEMORY STRENGTH AND REDUCES TO A BOUND ON THE **ACCURACY OF SIMULATED FUTURE STATES.**

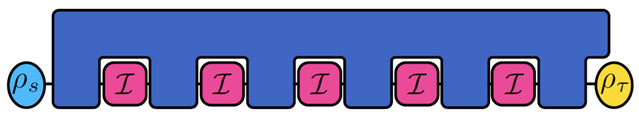

npj Quantum Inf. **7**, 149 (2021)
P. Taranto, F.A. Pollock, K. Modi

SUMMARY AND OPEN QUESTIONS

THE PROCESS TENSOR FORMALISM **CLEARLY DEFINES A MULTI-TIME QUANTUM STOCHASTIC PROCESS** AS A LINEAR, CP MAP **FROM ANY POSSIBLE INTERROGATION SEQUENCE** TO THE **CORRECT PROBABILITY DISTRIBUTION** OVER OUTCOMES. WITH THIS, WE QUANTIFIED AND ANALYSED IMPORTANT **MEMORY PROPERTIES SUCH AS STRUCTURE, LENGTH, AND STRENGTH.**

THE CORRELATION STRUCTURE OF THE PROCESS **ENCODES ALL POTENTIAL MEMORY EFFECTS**; WHICH ARE OBSERVED IN A GIVEN EXPERIMENT IS DETERMINED BY "PROJECTING" THE PROCESS ONTO SAID INSTRUMENT. BY ALLOWING FOR **FREEDOM OF INSTRUMENT CHOICE**, WE SEE THE NEED FOR AND DEVELOP FLEXIBLE, OPERATIONAL **INSTRUMENT-SPECIFIC MEMORY PROPERTIES & METHODS.**

OPEN QUESTIONS INCLUDE ANALYSING THE STRUCTURE AND LIMITATIONS OF **QUANTUM PROCESSES WITH CLASSICAL MEMORY** AND DETERMINING THE **RELATIONSHIP BETWEEN MULTI-TIME MEMORY COMPLEXITY** AND **MULTI-PARTITE CORRELATION STRUCTURE** OF THE PROCESS TENSOR.

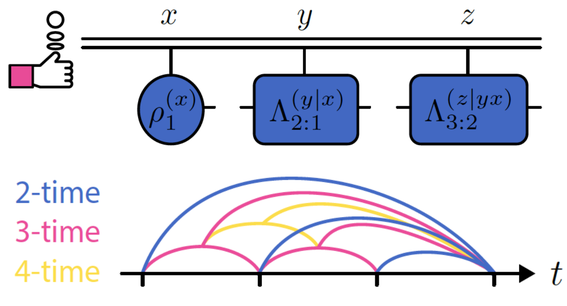

東京大学 THE UNIVERSITY OF TOKYO
JAPAN SOCIETY FOR THE PROMOTION OF SCIENCE 日本学術振興会
JSPS—NUS JOINT SEMINAR: NII TOKYO, JAPAN 2023